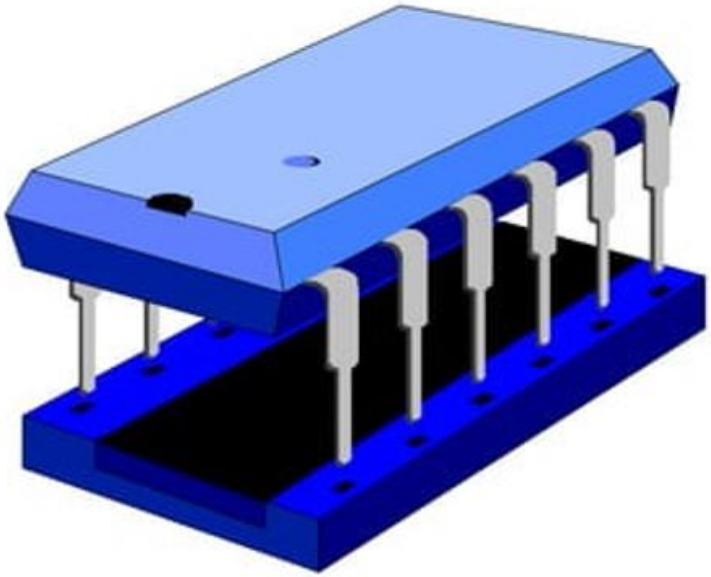

Transistor-Transistor Logic (TTL)

Transistor-Transistor Logic (TTL)

- Transistor-Transistor Logic (TTL) is a common digital circuit design that uses bipolar junction transistors.
- TTL logic gates are known for their fast switching speeds compared to RTL and DTL
- Despite their speed advantages, TTL circuits typically consume more power compared to some other logic families (CMOS; will discuss later).
- TTL remains widely used in various applications, balancing speed and power considerations based on specific design requirements
- TTLs are available in different types and their classification is done based on the output section as following.
    - Passive Pull-up TTL
    - Active Pull-up TTL
    - TTL Open Collector Output (will not discuss)
    - TTL Trisate

Simple TTL NAND Gate

- The operation of all four types primarily depends on the functionality of the following circuit, recognized as **simple TTL logic**. Here, the operation of the input transistor (Q_1) is somewhat unconventional.

❑ Simple TTL NAND gate with at least one low logic input.

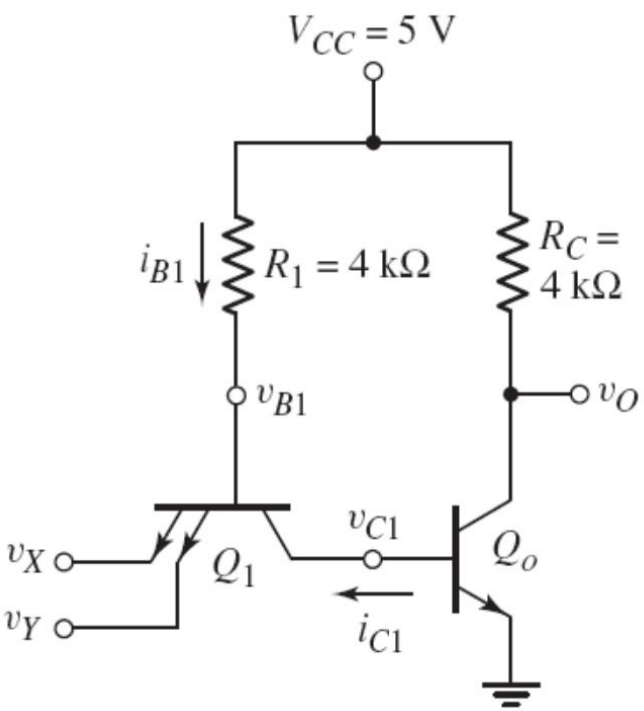

The base voltage of Q_1 is

$$V_{B1} = V_X + V_{BE(Sat)}$$

The base current into Q_1 is

$$i_{B1} = \frac{V_{CC} - V_{B1}}{R_1}$$

Here the current i_{C1} <<< i_{B1}

Transistor (Q_1) is biased in saturation

The collector voltage of Q_1 is

$$V_{C1} = V_X + V_{CE(Sat)}$$

∴ Transistor Q_0 is off → $V_0 = V_{CC}$

Simple TTL NAND Gate

❑ Simple TTL NAND gate with all high logic inputs.

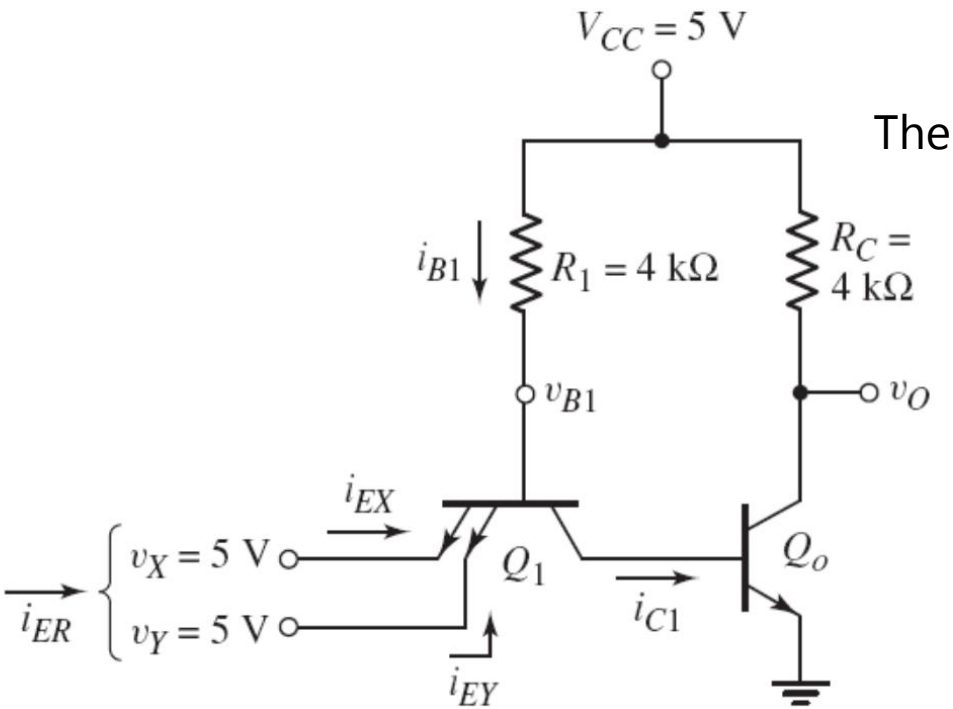

The base voltage of Q_1 by assuming $V_{BE(ON)} = V_{BC(ON)}$

$$V_{B1} = V_{BE(Sat)_{Q0}} + V_{BC(ON)_{Q1}} \approx 1.4V$$

The transistor Q1 in the **reverse active mode**

The emitter currents of Q_1

$$i_{EX} = i_{EY} = \beta_R i_{B1}$$

$$(i_C = \beta_R i_E \rightarrow i_C \Leftrightarrow i_E)$$

The collector currents of Q_1

$$i_{C1} = i_{B1} + i_{EX} + i_{EY}$$

$$= (1 + 2\beta_R) i_{B1}$$

The base current of Q_1 is

$$i_{B1} = \frac{V_{CC} - V_{B1}}{R_1}$$

The base current into Q_0 is almost same as the i_{B1} (as β_R is very small ~ 0. 2)

The Transistor Q_0 is in saturated region → $V_0 = V_{CE(Sat)Q_0}$

Passive Pull-up TTL

- Enhancing the circuit performance of the simple TTL configuration through the incorporation of a second current gain stage results in the attainment of simple TTL logic.

- This circuit is simple yet effective, offering a good balance of performance and ease of use.

❑ Passive Pull-up TTL NDND Gate Circuit

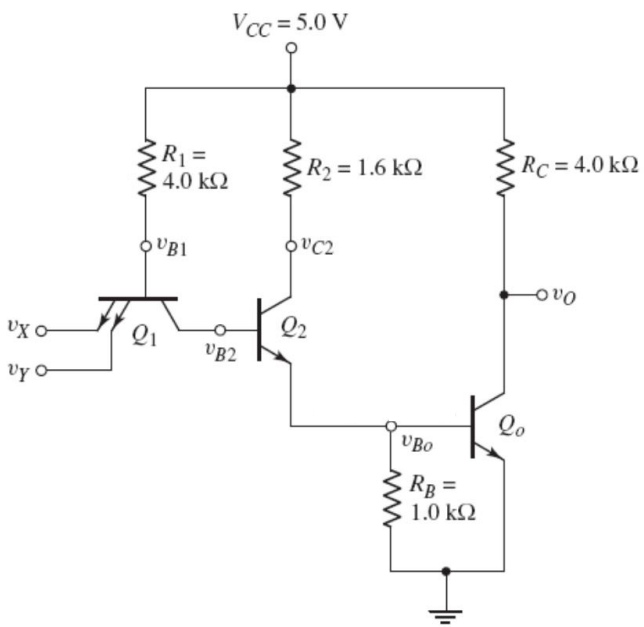

Symbol	Truth Table		
	V_x	V_y	V_0
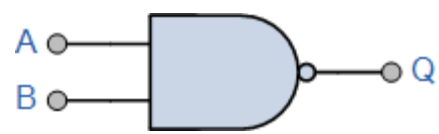 2-input NAND Gate	0	0	1
	0	1	1
	1	0	1
	1	1	0

Passive Pull-up TTL Operation

- What is the configuration of transistor Q_2? Common Collector (CC)
  - Input has given to the base terminal
  - Output has taken from the emitter terminal
- No voltage gain in the CC configuration and act as an emitter follower

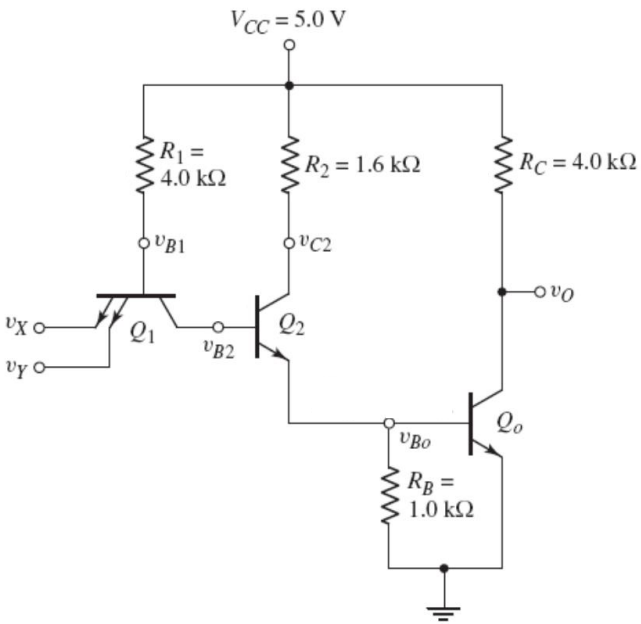

Input		Region			Output
V_x	V_y	Q_1	Q_2	Q_0	V_0
0	0	Sat	Cut-off	Cut-off	1
0	1	Sat	Cut-off	Cut-off	1
1	0	Sat	Cut-off	Cut-off	1
1	1	Rev-Act	Sat	Sat	0

- These conditions confirm the dynamic operation of a NAND gate using transistor-transistor logics

Exercise

Calculate the currents and voltages for the basic TTL NAND circuit when both inputs are low and both are high. Consider the piecewise linear transistor. parameters are as listed in the Table . In addition, assume the forward current gain is $\beta_F \equiv \beta = 25$ and the inverse current gain of each input emitter is $\beta_R = 0.1$.

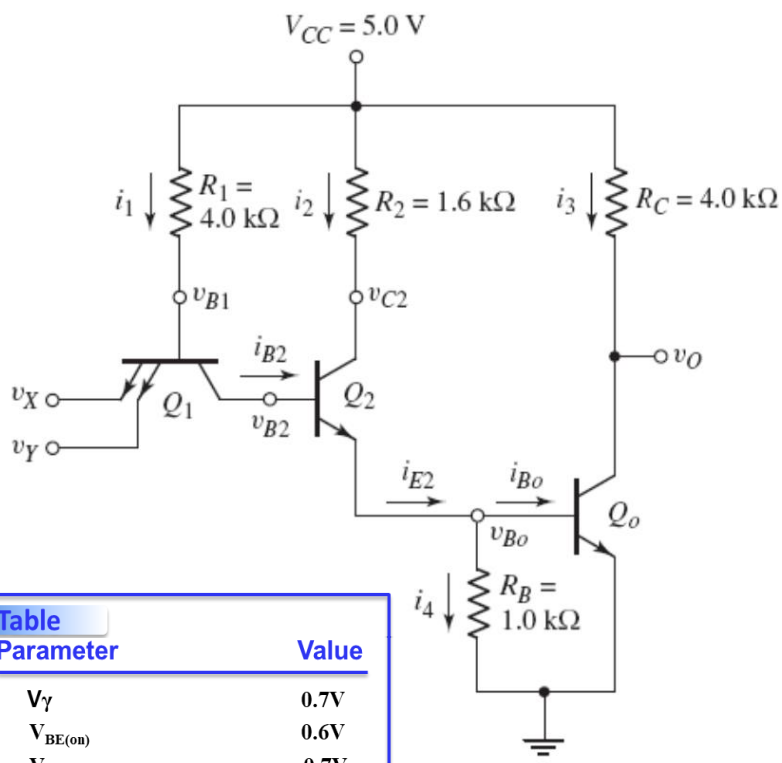

Table

Parameter	Value
V_γ	0.7V
$V_{BE(on)}$	0.6V
$V_{BE(sat)}$	0.7V
$V_{CE(sat)}$	0.2V

Solution:

For Vx = Vy = 0.2 V (Q_1 is in saturated region)

$V_{B1} = V_x + V_{BE(sat)} = 0.2 + 0.7 = 0.9$ V
$V_{B2} = V_x + V_{CE(sat)} = 0.2 + 0.2 = 0.4$ V

$I_1 = (V_{CC}-V_{B1})/R_1 = (5-0.9)/4 = 1.025$ mA

Since Q_2 and Q_0 are in cut off region
$I_{B2} = I_2 = I_{E2} = 0$ mA
$I_{B0} = I_3 = 0$ mA
$I_4 = I_{E2} - I_{B0} = 0$ mA

The output voltage
$V_{CC}-V_0 = I_3 R_C$
$V_{CC} = V_0$ (as $I_3 = 0$)
Hence $V_0 = 5$V

Exercise

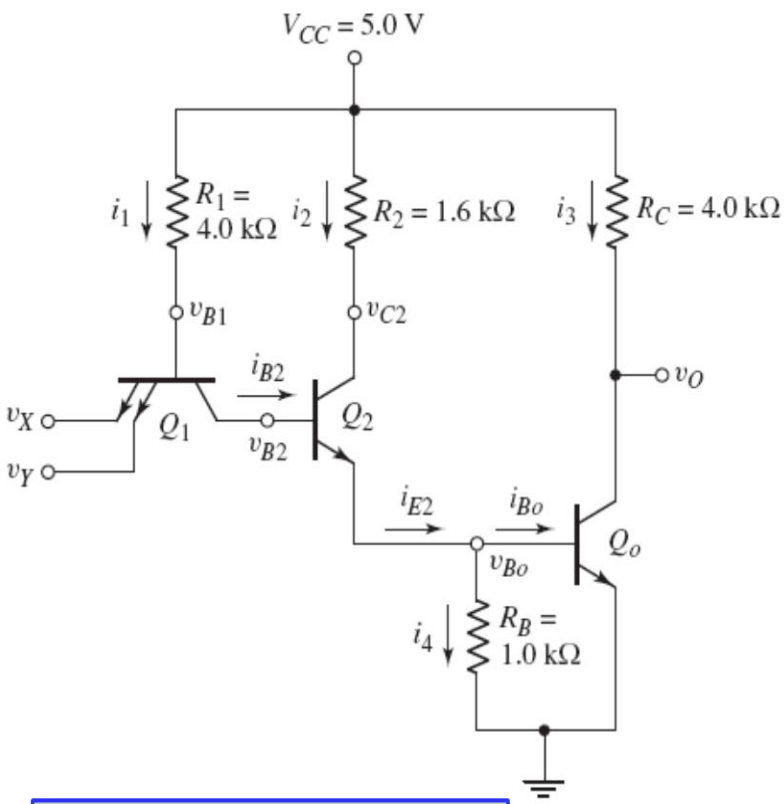

Table

Parameter	Value
V_γ	0.7V
$V_{BE(on)}$	0.6V
$V_{BE(sat)}$	0.7V
$V_{CE(sat)}$	0.2V

Solution:

For Vx = Vy = 5 V (Q1 is in reverse active mode)
Since both Q_2 and Q_0 are in active saturated regions

$V_{B1} = V_{BC(ON)Q1} + V_{BE(sat)Q2} + V_{BE(sat)Q0} = 0.6 + 0.7 + 0.7 = 2.0$ V
$V_{C2} = V_{CE(sat)Q2} + V_{BE(sat)Q0} = 0.2 + 0.7 = 0.9$ V
$V_{B2} = V_{BE(sat)Q2} + V_{BE(sat)Q0} = 0.7 + 0.7 = 1.4$V
$V_{BE(sat)} = V_B - V_E \rightarrow V_{B0} = 0.7$ V
$V_0 = V_{CE\ (sat)} = 0.2$ V

$I_1 = (V_{CC}-V_{B1})/R_1 = (5 - 2) / 4 = 0.75$ mA
(Let's consider the reverse currents; I_{EX} and I_{EY} in transistor Q1)
Since transistor Q_1 is in reverse active mode $I_{EX} = I_{EY} = \beta_R I_1$
$I_2 = (V_{CC}-V_{C2})/R_2 = (5 - 0.9) / 1.6 = 2.5625$ mA
$I_3 = (V_{CC}-V_0)/R_C = (5 - 0.2) / 4 = 1.2$ mA

$I_{B2} = I_1 + I_{EX} + I_{EY} = I_1(1 + 2\beta_R) = 0.75\ (1 + 2\times0.1) = 0.9$ mA
$I_{E2} = I_{B2} + I_2 = 0.9 + 2.5625 = 3.4625$ mA
$I_4 = (V_{BE(sat)})/R_B = 0.7/ 1$ mA $= 0.7$ mA
$I_{B0} = I_{E2} - I_4 = 3.4625 - 0.7 = 2.7625$ mA

Exercise

Assume no load is connected to the output. Determine the power dissipated for (a) $V_X = V_Y = 0.2V$ and (b) $V_X = V_Y = 5V$. Hence, find the average power dissipation in the circuit

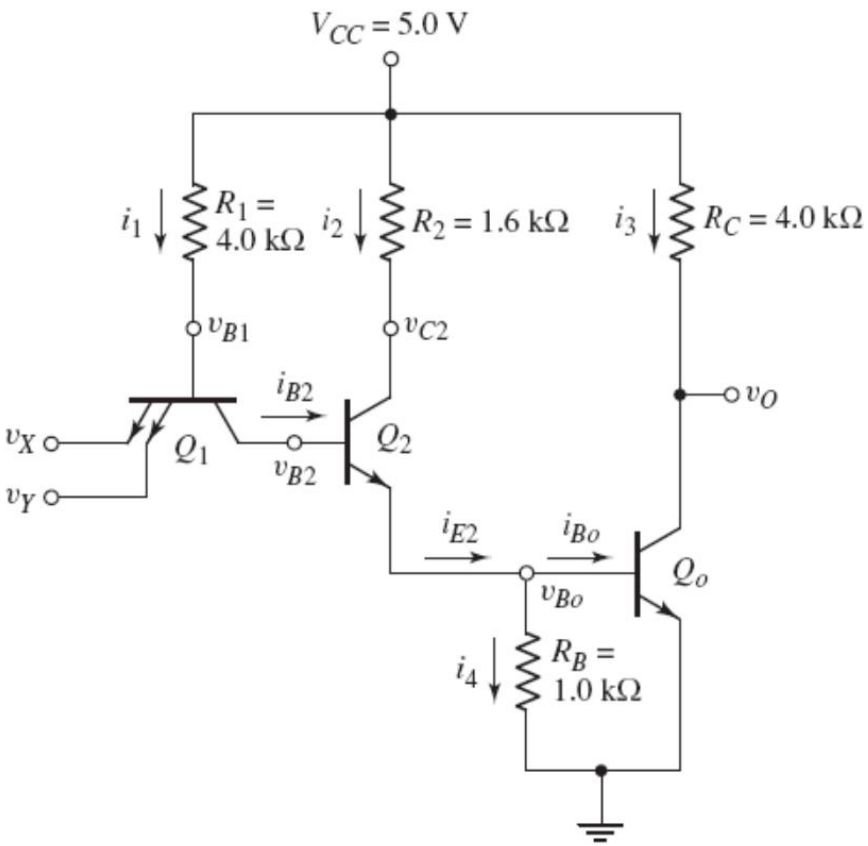

Solution:

For Vx = Vy = 0.2 V

$P_{(0)} = V_{CC}\,(I_1) = 5\,(1.025) = 5.13$ mW

For Vx = Vy = 5 V

$P_{(1)} = V_{CC}\,(I_1+I_2+I_3) = 5\,(0.75 + 2.5625+1.2) = 22.56$ mW

Hence, average power dissipation

$P_{av} = (P_{(0)} + P_{(1)}) / 2$

$= 13.84$ mW

Exercise

Calculate the maximum fan-out for the output low condition

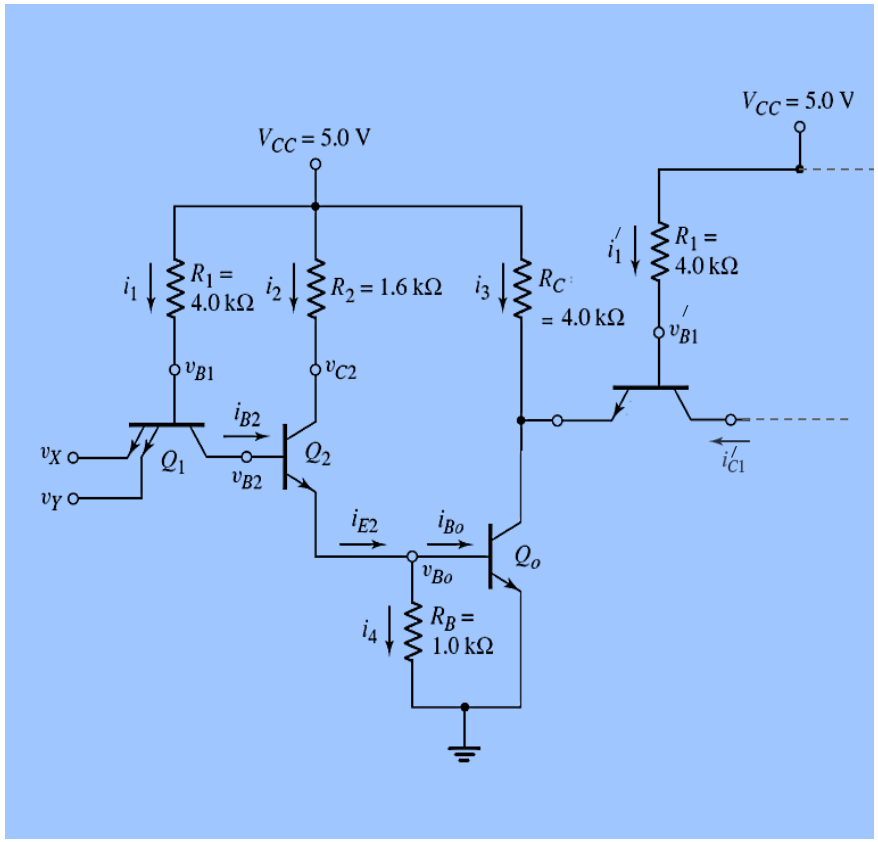

Solution:

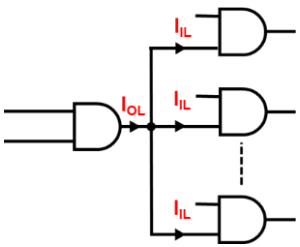

Low state fan-out $= \left| \dfrac{I_{OL(\max)}}{I_{IL}} \right|$

The output voltage is v_O = 0.2 V
So that V_{B1}' = 0.2 + 0.7 = 0.9 V
$I_1' = (V_{CC}-V_{B1})/R_1$ = (5 – 0.9) / 4 = 1.025 mA

Therefore I_{IL} = 1.025 mA

We calculated the base current into Q_o as i_{Bo} = 2.7625 mA
The maximum collector current in Q_o
$I_{C0(max)} = \beta_F I_{B0}$ = 25× 2.7625 = 69.06 mA

Therefore $I_{OL(max)}$ = 69.06 mA

The maximum fan-out, N = (69.06/ 1.05) = 67.38
~ 67

Passive Pull-up TTL (Modification)

- Logic gates are not operated in isolation but are used to drive other similar types of logic gates, will act as a load capacitance (C_L) at the out put terminal.
- In passive pull-up TTL, when the output is at a low logic level and any input goes low, ideally, the output transistor should immediately go into cutoff.
- However, the presence of C_L makes this dependent on the charging time constant ($\tau = R_c C_L$), which defines the speed of the logic operation.

  - When Qo is OFF → τ should be low (R_C)
  - When Qo is ON → τ should be high (R_C)

- These requirements inherently conflict with each other. Achieving both simultaneously is possible only by incorporating an active element.

Active Pull-up TTL (Totem-Pole out put)

- When the pull-up resistor is replaced by an active element (i.e., by a transistor), the charging and discharging times can be controlled under each condition, and this configuration is known as the Active pull-up or Totem pole output configuration.

❑ TTL NDND Gate

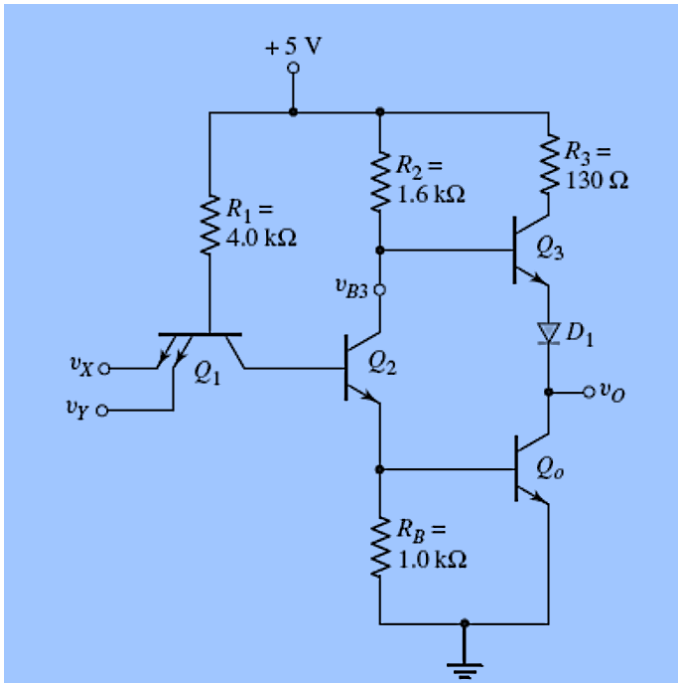

Symbol	Truth Table		
	B	A	Q
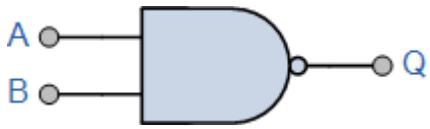	0	0	1
	0	1	1
	1	0	1
2-input NAND Gate	1	1	0

Active Pull-up TTL Operation

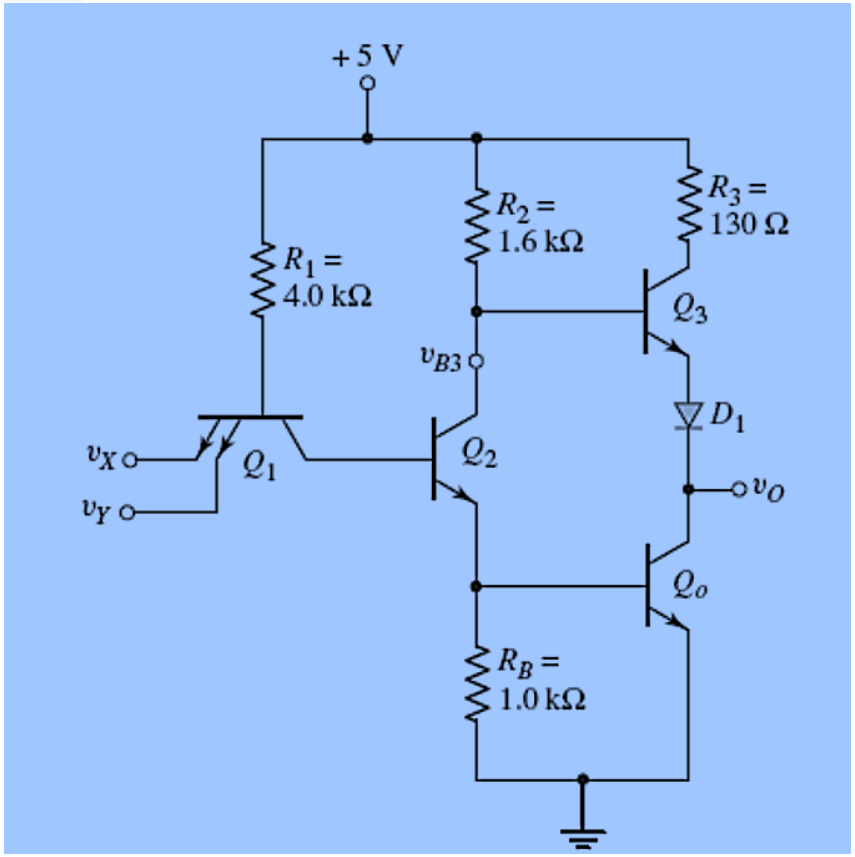

- WITH AT LEAST ONE LOW INPUT
  - Q_1 is saturated
  - Q_2 is cut-off
  - Q_0 is cut-off
  - Q_3 is saturated

  V_0 ~ 5.0 V (High)

- WITH BOTH HIGH INPUTS
  - Q_1 is reverse- active
  - Q_2 is saturated
  - Q_0 is saturated
  - Q_3 is cut-off

  V_0 ~ 0.2 V (low)

The diode D_1 is used in the circuit to keep the transistor Q_3 in the cut off region, essentially at both inputs are high.

TTL Tristate Logics

- Tristate logic devices have three states: Logic low, Logic High, and High-impedance state
- Tristate logics are usually used to bus multiple signals on the same wire.

❑ TTL NOT Gate

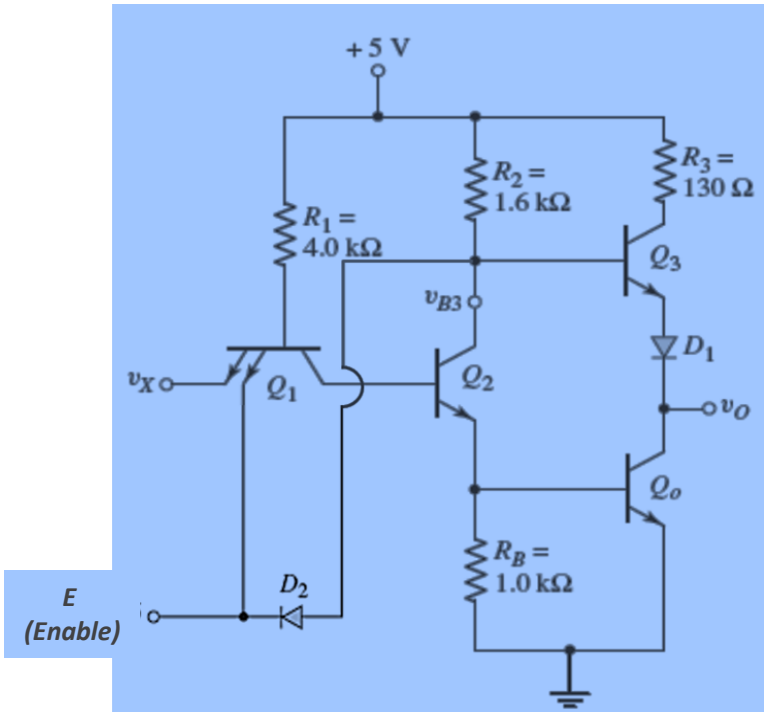

Symbol	Truth Table		
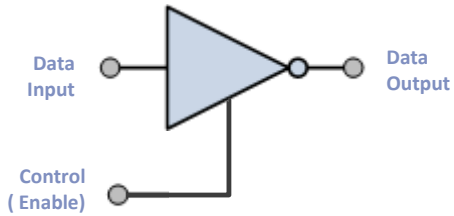	V_x	E	Q
	0	0	High Z
	1	0	High Z
	0	1	1
	1	1	0

TTL Tristate NOT Gate Operation

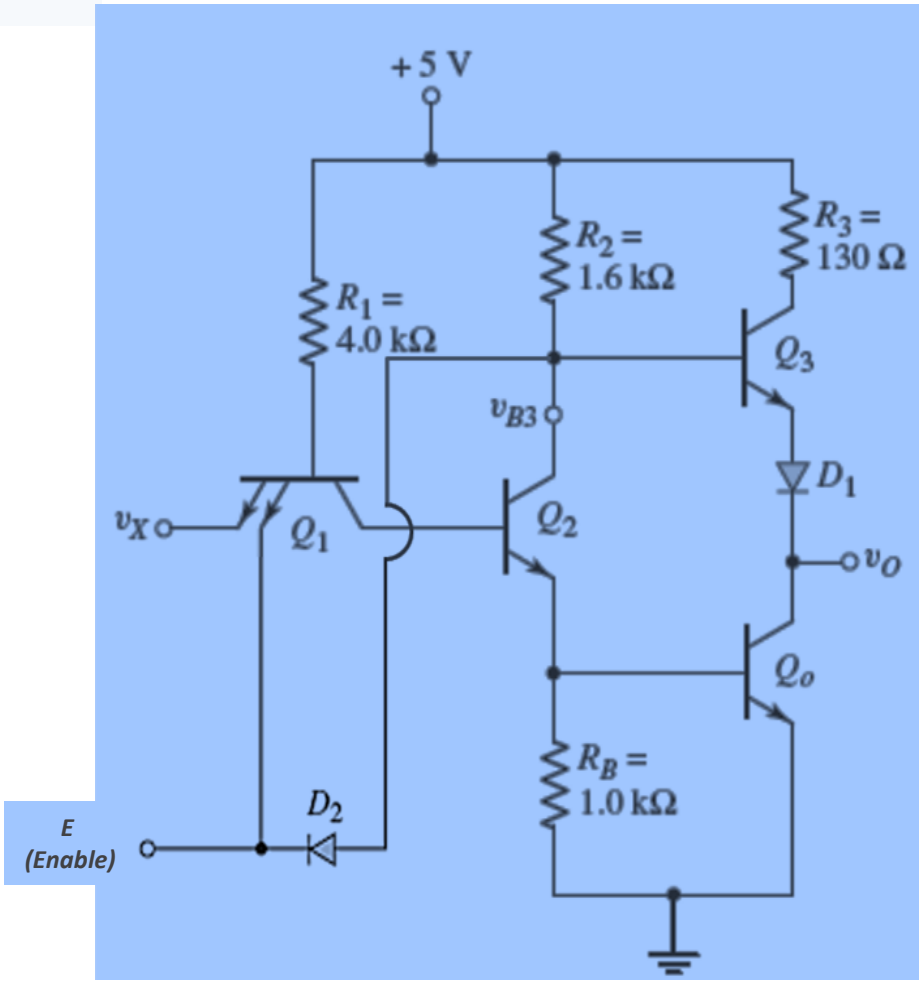

- WITH LOW ENABLE
  - Q_1 is saturated
  - Q_2 is cut-off
  - Q_0 is cut-off
  - D_2 is F.B
  - Q_3 is cut-off

  V_0 = High Z

- WITH HIGH ENABLE
  - D_2 is R.B.
  - The operation is similar to the previous case

  $$V_0 = \overline{V_x}$$

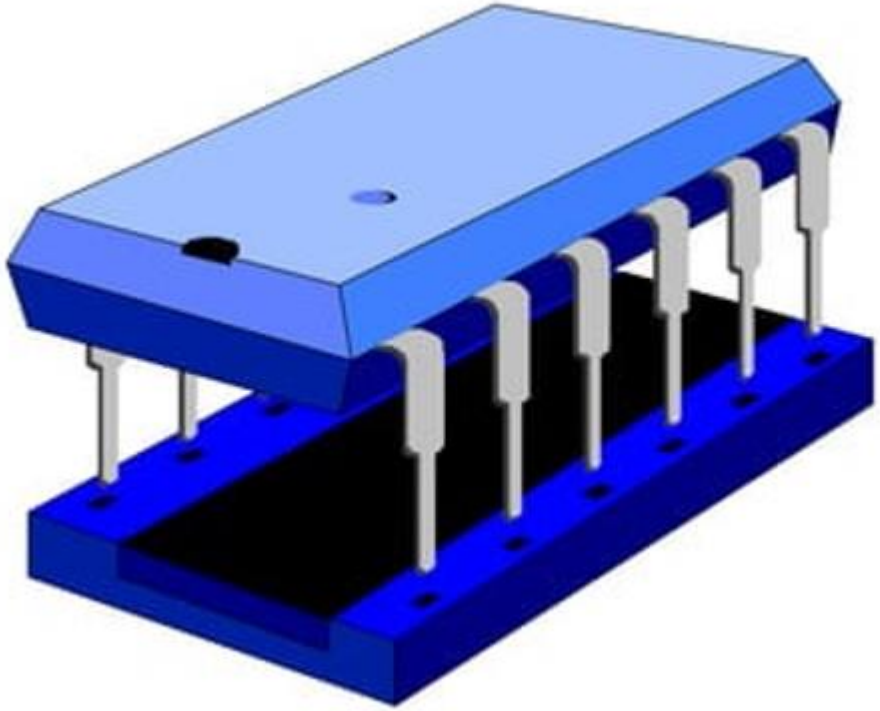

MOS Logic Family

MOS Logic Family

- When incorporating p-channel or n-channel components in logic circuits, they are denoted as PMOS and NMOS, respectively.

- If enhancement-mode P-channel or n-channel MOS devices are employed, they are referred to as complementary MOSFETs, and the logic based on these devices is recognized as CMOS Logic.

❑ Advantages of MOS circuits

- High fan-out
- High switching speed
- Better compatibility
- Low power dissipation

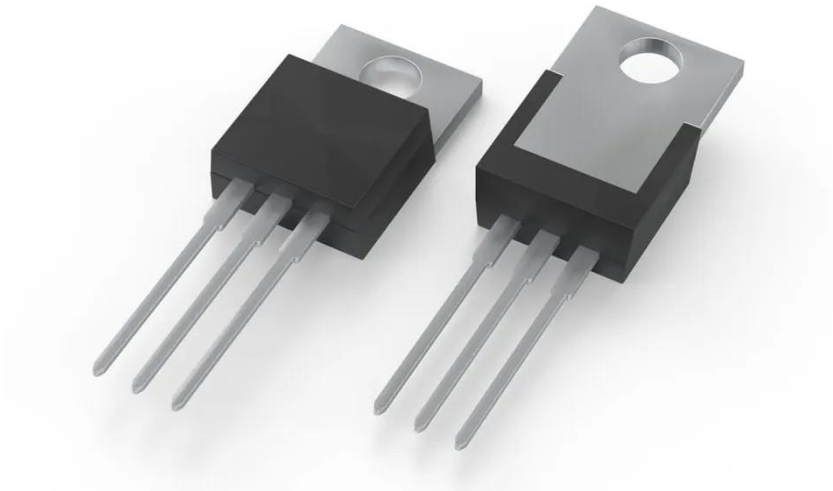

The Series connection of MOS

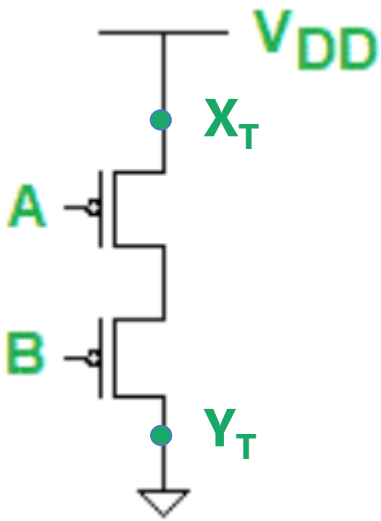

PMOS

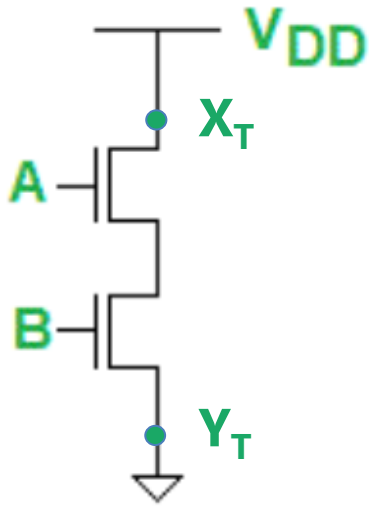

NMOS

A	B	PMOS	NMOS
0	0	1	0
0	1	0	0
1	0	0	0
1	1	0	1

- A series connection of PMOS behaving as a NOR logic gate
- A series connection of NMOS behaving as a AND logic gate

The Parallel connection of MOS

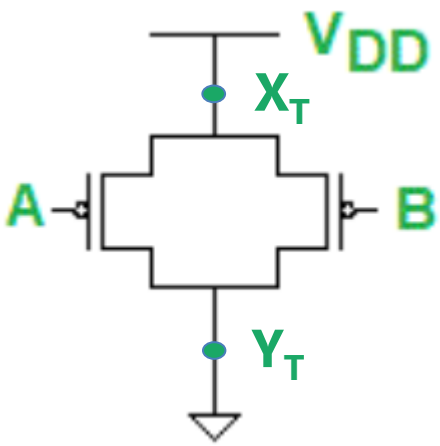

PMOS

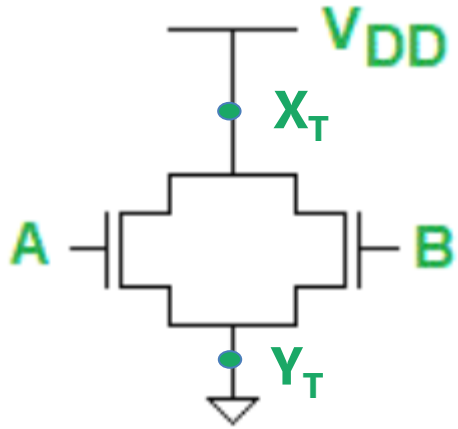

NMOS

A	B	PMOS	NMOS
0	0	1	0
0	1	1	1
1	0	1	1
1	1	0	1

- A parallel connection of PMOS behaving as a NAND logic gate
- A parallel connection of NMOS behaving as a OR logic gate

Static CMOS Logics

- To implement a Boolean function using static CMOS technology, a switching circuit requires PMOS switches in the upper block and NMOS switches in the lower block, ensuring complementary operation

- The upper block consisting of only PMOS is called a pull-up network (PUN)

- The lower block consisting of NMOS is called a pull-down network (PDN)

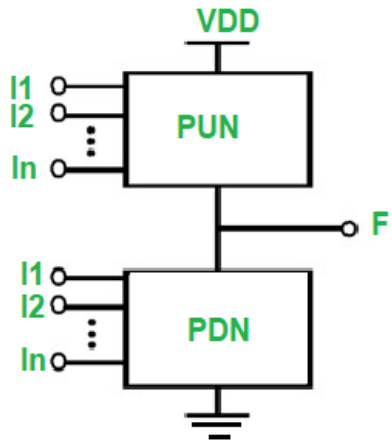

General structure of a CMOS gate

Design of CMOS Inverter (Static)

- The CMOS inverter consists of a series connection of a PMOS and an NMOS
- When the input is logic 0, the reverse happens – NMOS goes "off" and PMOS goes "on"
- If input is high or 1, the NMOS is switched on while the PMOS is turned off.

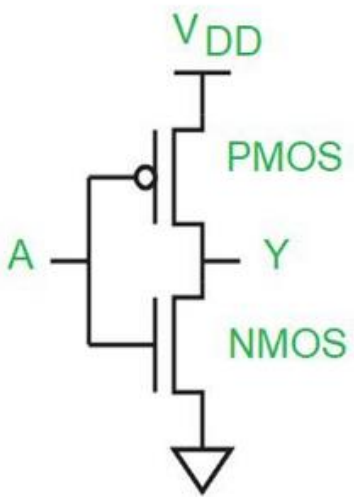

Truth Table			
A	PMOS	NMOS	Q
0	ON	OFF	1
1	OFF	ON	0

Design of CMOS NAND Gate (Static)

- It consist of two series n MOS transistors between Y and GND and two parallel p MOS transistors between Y and V_{DD}.

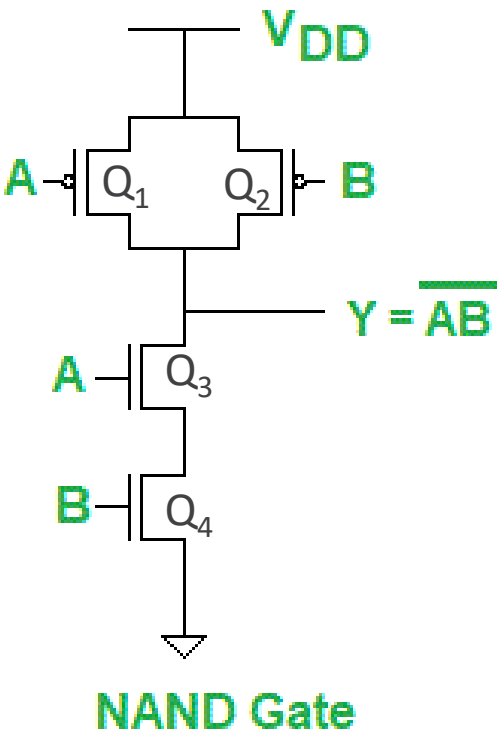

Input		PMOS		NMOS		Y
A	B	Q_1	Q_2	Q_3	Q_4	Q
0	0	ON	ON	OFF	OFF	1
0	1	ON	OFF	OFF	ON	1
1	0	OFF	ON	ON	OFF	1
1	1	OFF	OFF	ON	ON	0

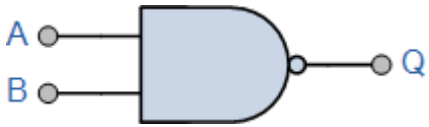

2-input NAND Gate

Exercise

Boolean Function Implementation (Static CMOS)

Determine how to implement the Boolean expression of $\overline{(A+B)\cdot(C+D)\cdot(E+F+(G\cdot H))}$ using CMOS logic

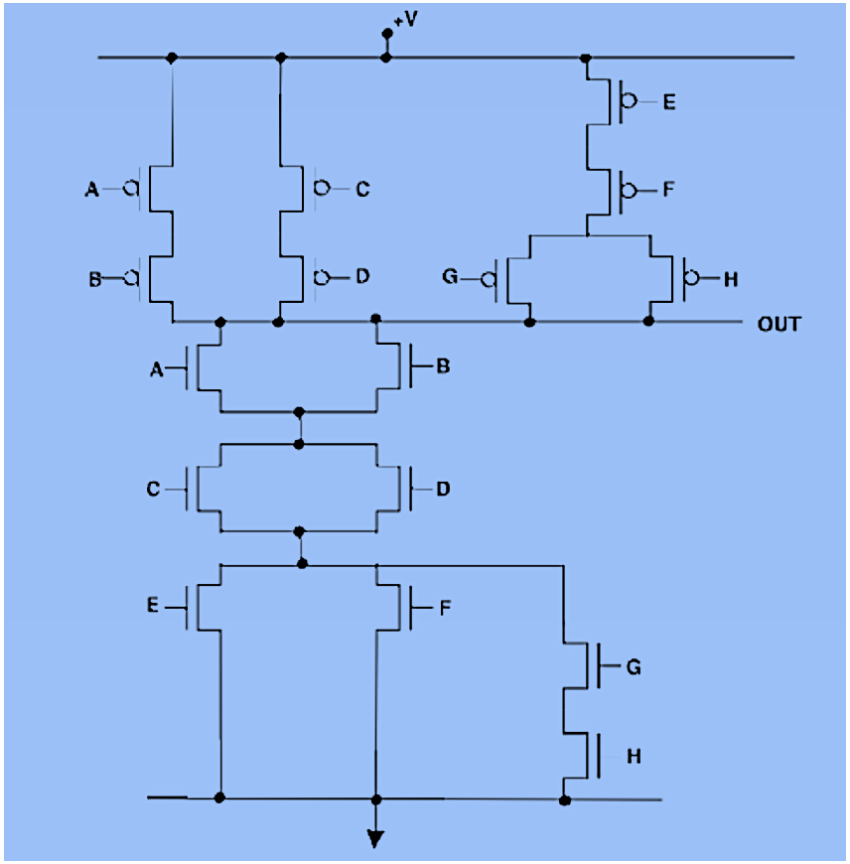

Exercise

Boolean Function Implementation (Static CMOS)

Determine how to implement the Boolean expression F = AB + BC + CA using CMOS logic

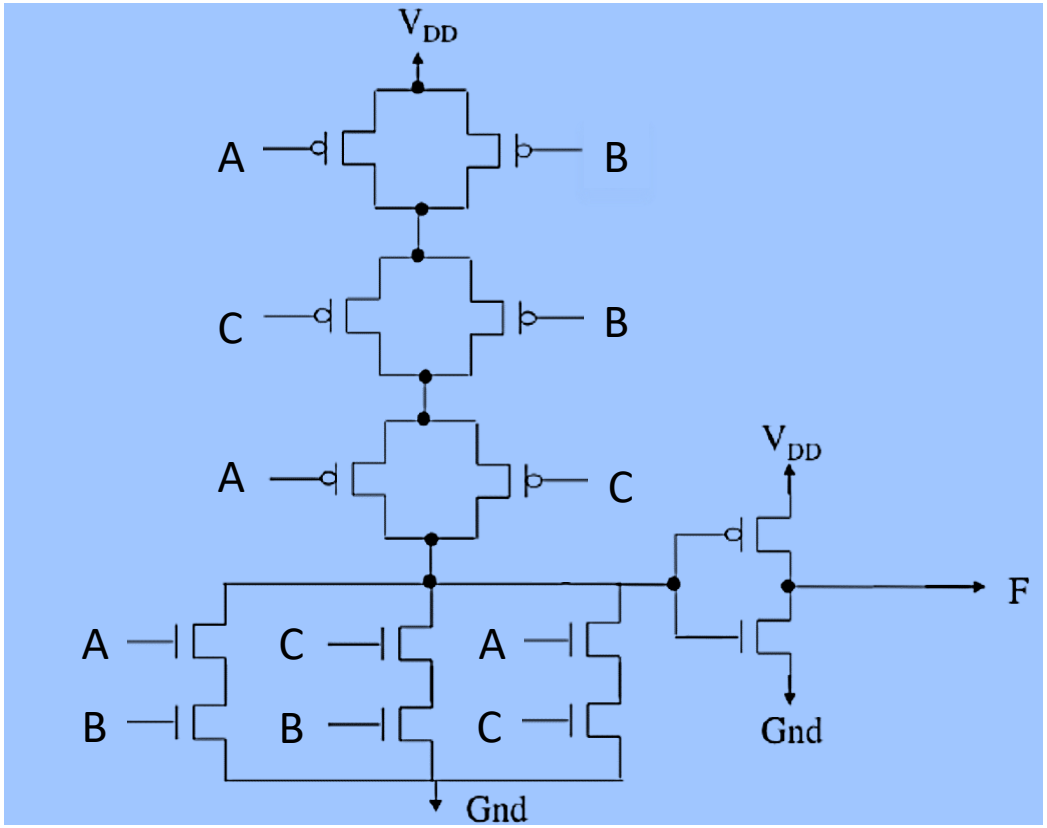

Exercise

Boolean Function Simplification (Static CMOS)

Determine the output Boolean expressions for the given CMOS logic circuit

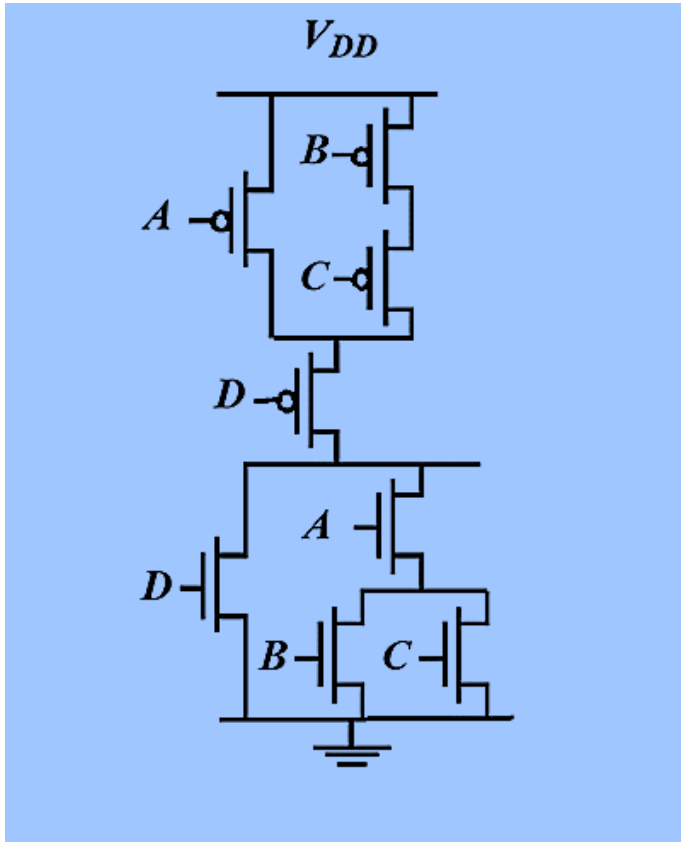

Consider the pull-up network

$$OUT = \overline{D + A \cdot (B+C)}$$

Consider the pull-down network

$$OUT = \overline{D + A \cdot (B+C)}$$

The output is the same from both networks; considering only one suffices to determine the Boolean expression

Exercise

Boolean Function Simplification (Static CMOS)

Determine the output Boolean expressions for the given CMOS logic circuits

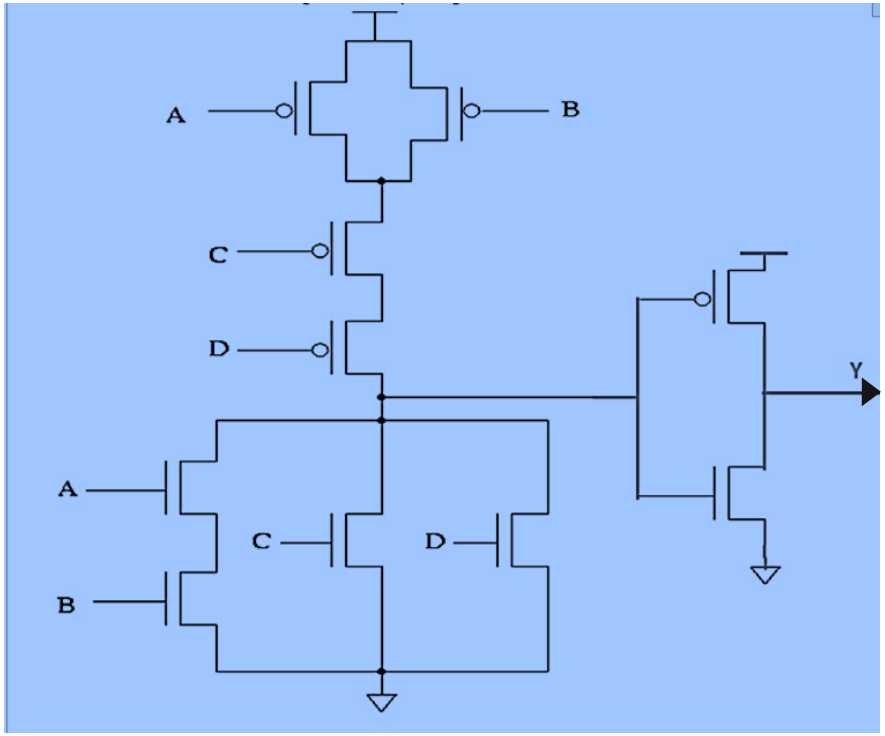

$$Y = (C + D) + A \cdot B$$

Fabrication & Operation of a MOSFET

N – Channel MOSFET

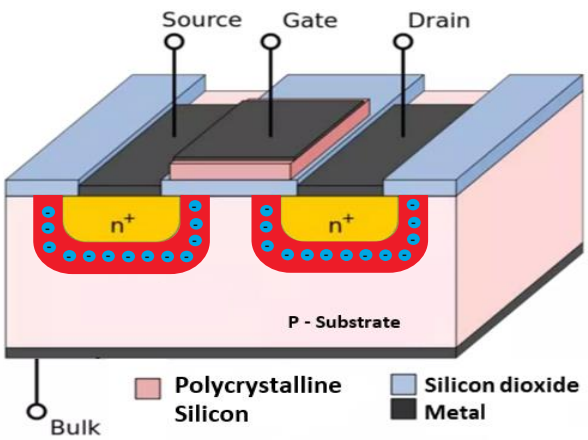

Fabricate two heavily doped n-regions on a P-Substrate

Deposit an oxide layer (SiO2) on top of the substrate to act as an insulator

Add another layer of metal to form the gate structure on the insulator

MOSFET as a switch (Cut off)

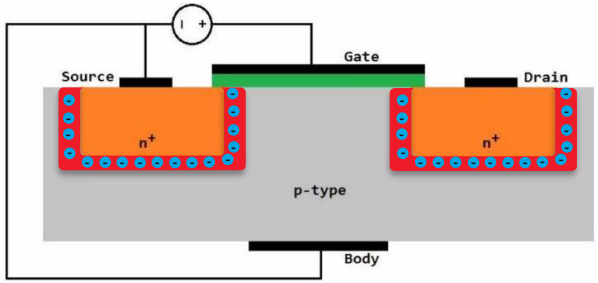

$V_{GS} \leq V_T$ **(Threshold voltage)**

$I_{DS} = 0$

MOSFET as a switch (Saturation)

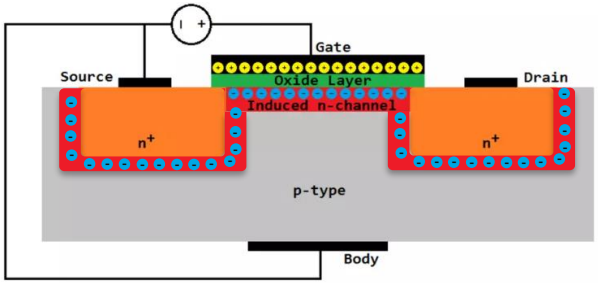

$V_{GS} > V_T$ **(Threshold voltage)**

$$I_{DS} = \frac{1}{2}\mu_n C_{OX} (W/L)_n (V_{GS} - V_T)^2$$

CMOS - Sizing (Basic Inverter)

- CMOS sizing essentially involves optimizing the dimensions of both PMOS and NMOS transistors.

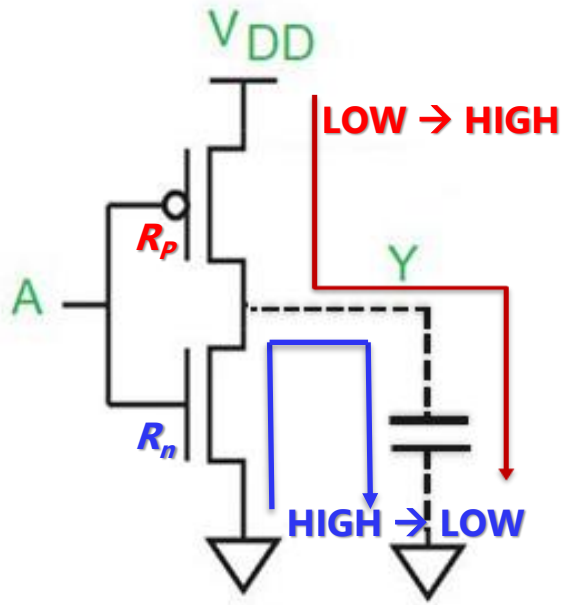

R_p= Resistance of PMOS transistor
R_n= Resistance of NMOS transistor

To possess an equal charging and discharging time in **basic CMOS inverter**

$$R_p = R_n$$

$$\mu_n (W/L)_n = \mu_p (W/L)_p$$

However due to the nature of ***e's*** and ***h's***

$$(W/L)_p > (W/L)_n$$

This is the designing condition for the CMOS inverter

CMOS - Sizing (General Case)

❑ Series connection design condition (pull-up or pull-down network)

Consider the series combination of pull-up network; we should design it in such a way that its speed matches, that of the pull-up network in a CMOS inverter.

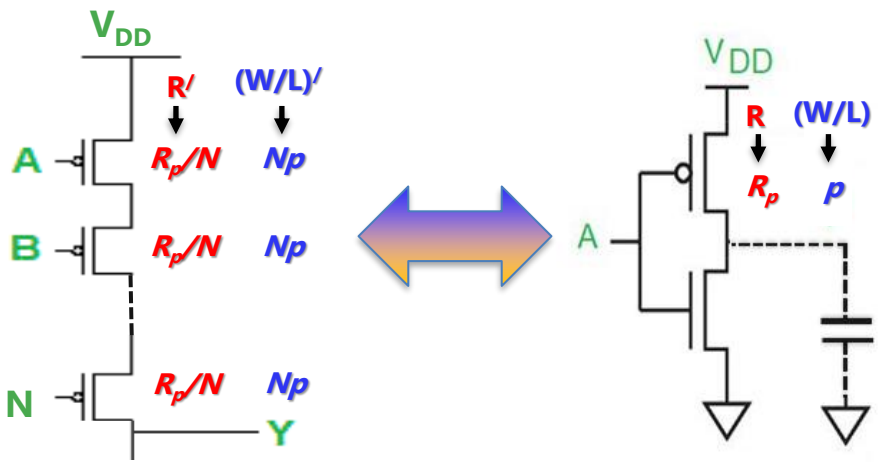

DESIGN CONDITIONS

1) Resistance of each PMOS

$$R' = R_p/N.$$

2) (W/L) ratio of each PMOS

$$(W/L)' = Np$$

R'= Resistance of each transistor (series combination)
R= Resistance of CMOS inverter (Pull-up network)

(W/L)' = Width-to-length ratio of each PMOS transistor
(W/L)= Width-to-length ratio of CMOS inverter (Pull-up network)

The design conditions remains the same for a series pull-down network

CMOS - Sizing (General Case)

❑ Parallel connection design condition (pull-up or pull-down network)

- Consider the parallel pull-up network; once again, we should design it in such a way that its speed matches, that of the pull-up network in a CMOS inverter.
- Here, we need to consider the worst-case operation of the circuit, focusing on the path that provides the longest delay, for the design process

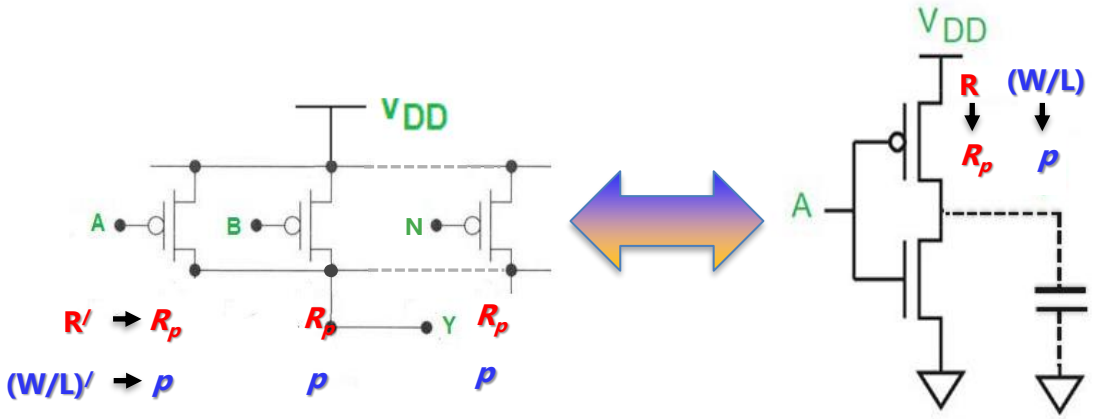

R′= Resistance of each transistor (Parallel combination)
R= Resistance of CMOS inverter (Pull-up network)

(W/L)′ = Width-to-length ratio of each PMOS transistor
(W/L)= Width-to-length ratio of CMOS inverter (Pull-up network)

DESIGNING CONDITIONS

Under the worst case operating only one branch)

1) Resistance of each PMOS

$$R' = R_P$$

2) (W/L) ratio of each PMOS

$$(W/L)' = p$$

The design concept remains the same for a parallel pull-down network

Exercise

Provide the transistor W/L ratios for the logic circuit shown below. Assume that for the basic inverter, n = 1.5 and p = 5.0, and that the channel length is 0.25 μm.

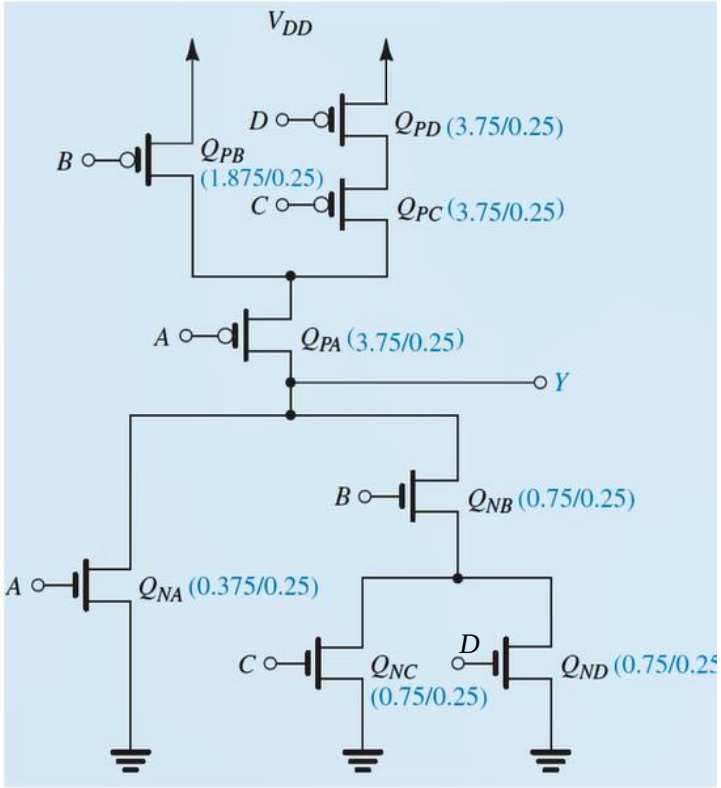

When determining the W/L ratio (<u>for any network</u>) , initiate the calculation by addressing the branch with a higher number of transistors.

Dynamic CMOS Logics

❑ Advantages of Dynamic Logics

- The key difference between static CMOS and dynamic CMOS is that static CMOS uses more transistors.
- In dynamic CMOS, we skip PMOS fabrication, hence there are fewer transistors, and less capacitance
- In dynamic CMOS, the size is smaller compared to static CMOS
- Dynamic CMOS switches faster than static CMOS

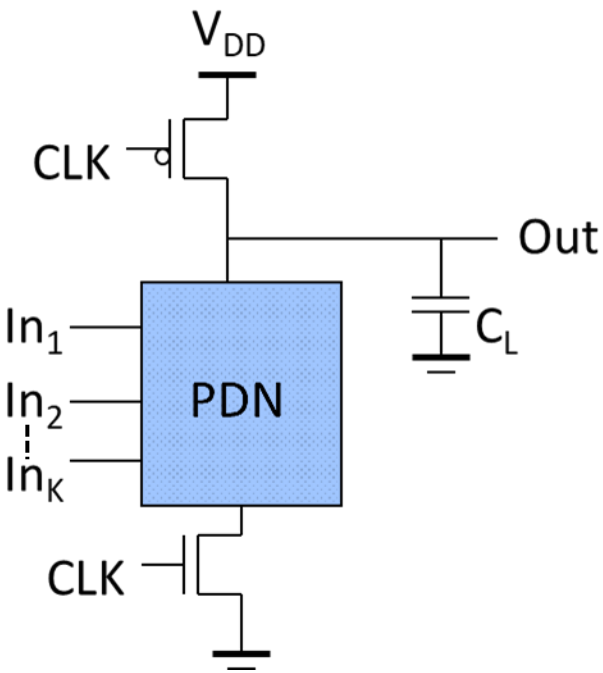

General structure of a Dynamic CMOS gate

Exercise

Boolean Function Implementation (Dynamic CMOS)

Determine the output Boolean expressions for the given CMOS logic circuit and redraw the circuit for dynamic logic implementation

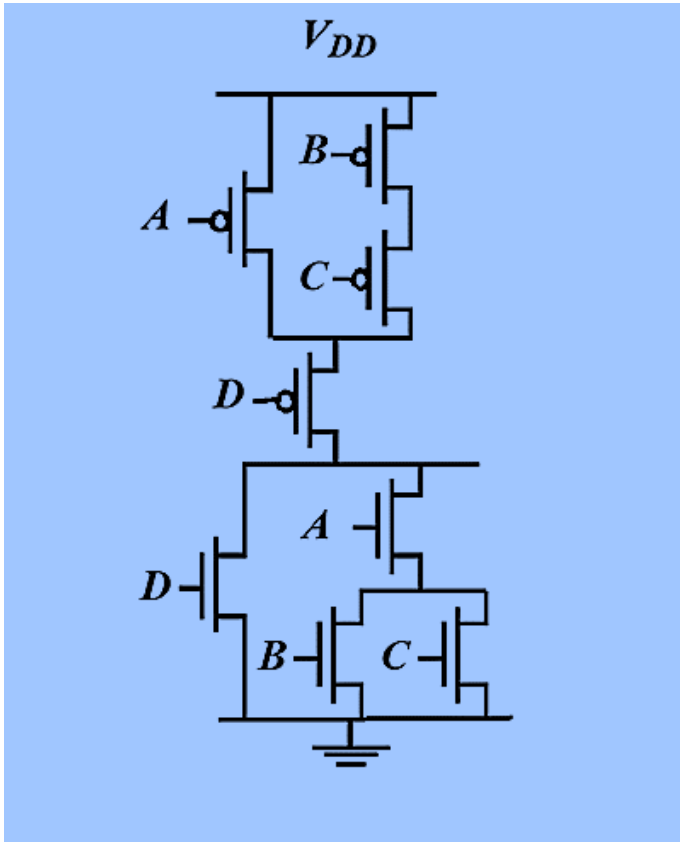

CMOS Inverter (Dynamic Logic)

❑ CMOS Inverter Circuit

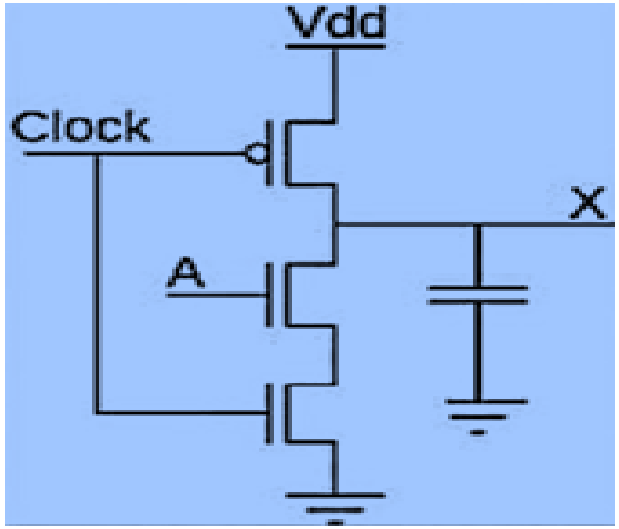

❑ Timing Diagram

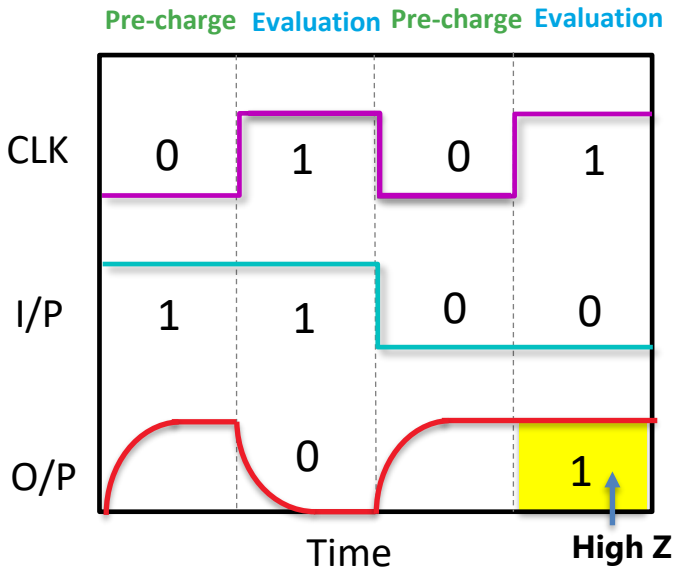

- Two Modes of operation : Pre- Charging Mode and Evaluation Mode
- **Pre- Charging mode** → When clock 0 **Evaluation mode** → When clock 1

❑ Disadvantages of Dynamic Logics

- Dynamic logic is more susceptible to noise (Due to the High- Z state)
- Operation is based on the pre- charging mode
- Cascading Issue - When two dynamic logic are connected together

Cascading Issue of Dynamic CMOS

- Consider a cascaded connection of two dynamic CMOS inverters

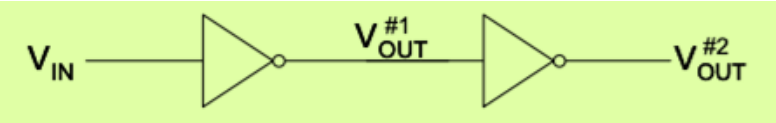

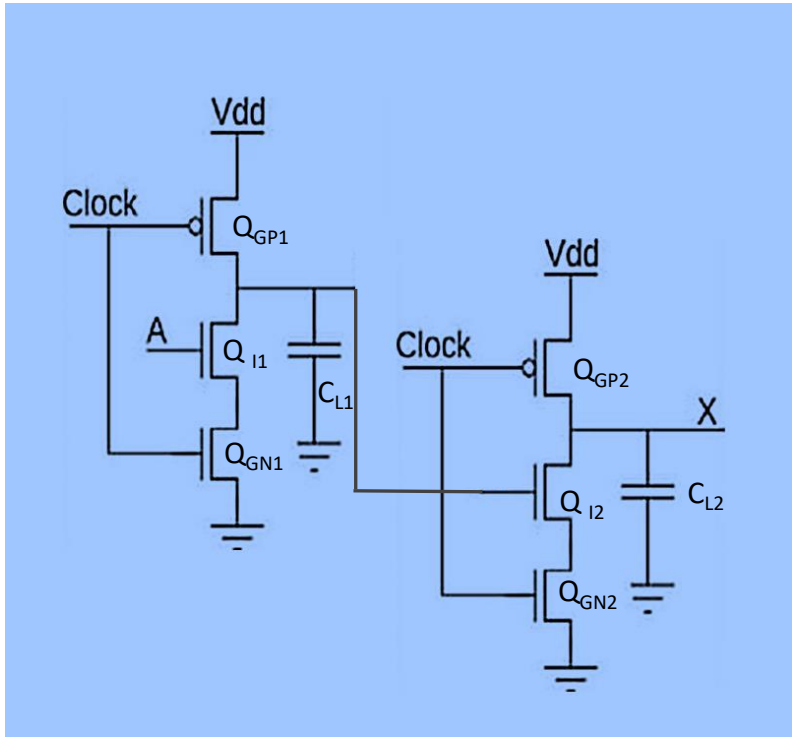

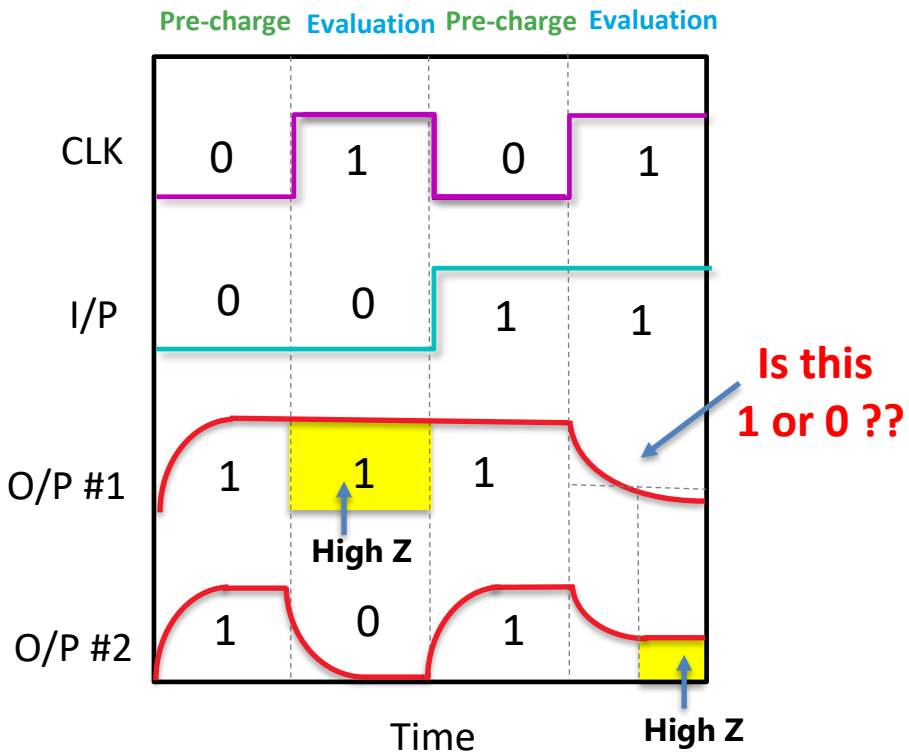

Cascading Issue of Dynamic CMOS

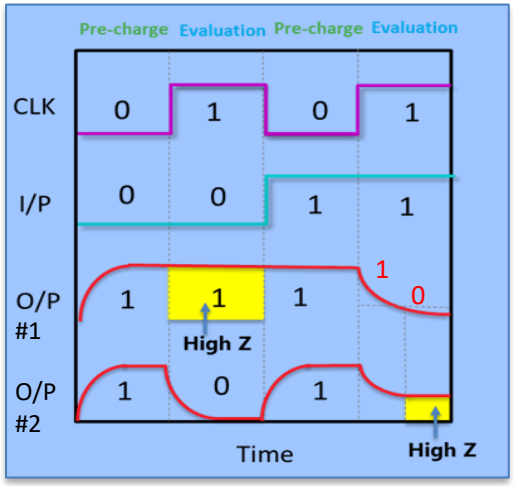

1. CLK-0 & I/P- 0 (Pre-Charging)

Both Gated PMOS transistors (Q_{GP1} and Q_{GP1}) are "ON"

Both C_{L1} and C_{L2} are charging to V_{DD}

2. CLK-1 & I/P- 0 (Evaluation)

Both Gated PMOS transistors (Q_{GP1} and Q_{GP1}) are "OFF"

CL1 remains at high impedance state (as Q_{I1} OFF)

CL2 is discharging through QI2 and QGN2 (as Q_{I2} and Q_{GN2} ON)

3. CLK-0 & I/P- 1 (Pre-Charging)

Both Gated PMOS transistors (Q_{GP1} and Q_{GP1}) are "ON"

Both C_{L1} and C_{L2} are charging to VDD (C_{L1} already charged from 2nd Step)

4. CLK-1 & I/P- 1 (Evaluation)

Both Gated PMOS transistors (Q_{GP1} and Q_{GP1}) are "OFF"

CL1 is discharging through QI2 and QGN2 (as Q_{I1} and Q_{GN1} ON – Until VO/P #1 = VDD/2)

After that CL1 remains at high impedance state, **neither 0 or 1** (as Q_{I1} and Q_{GN1} OFF)

Which is an unexpected result known as cascading issue

Domino Logic CMOS

- Domino Logic CMOS can be achieved by connecting a static inverter to the output of dynamic CMOS.
- The **cascading issue of dynamic CMOS** can be solved by using domino logic CMOS.

General structure of Domino Logic

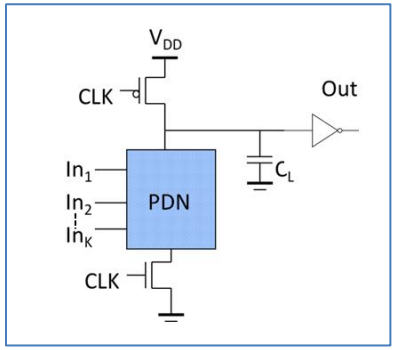

❑ Domino Logic CMOS Inverter Circuit

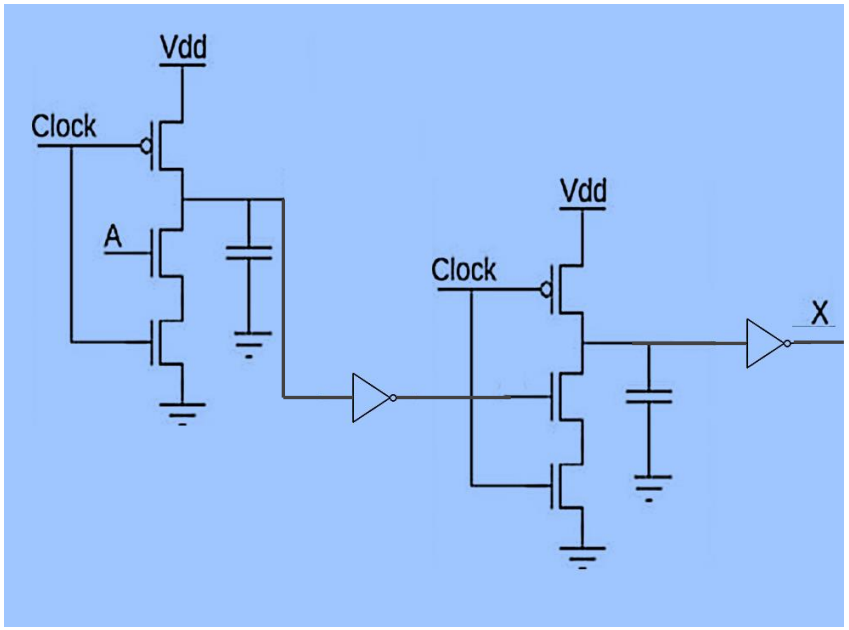
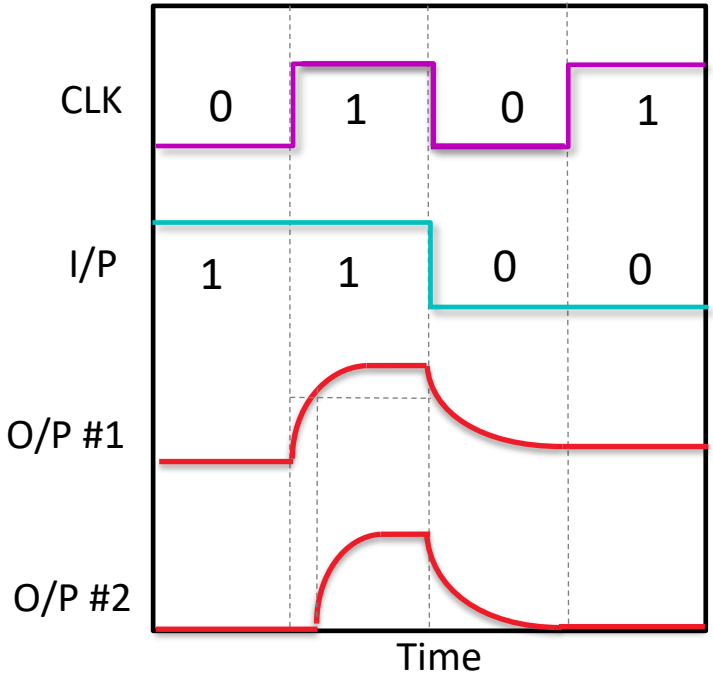
❑ Timing Diagram